US010692942B2

(12) **United States Patent**
Kim et al.

(10) **Patent No.: US 10,692,942 B2**
(45) **Date of Patent: Jun. 23, 2020**

(54) **ORGANIC LIGHT EMITTING DISPLAY DEVICE**

(71) Applicant: **SAMSUNG DISPLAY CO., LTD.**, Yongin-si, Gyeonggi-do (KR)

(72) Inventors: **Kwangmin Kim**, Yongin-si (KR); **Wonkyu Kwak**, Yongin-si (KR); **Kiwook Kim**, Yongin-si (KR); **Dongsoo Kim**, Yongin-si (KR); **Joongsoo Moon**, Yongin-si (KR); **Hyunae Park**, Yongin-si (KR); **Jieun Lee**, Yongin-si (KR); **Changkyu Jin**, Yongin-si (KR)

(73) Assignee: **SAMSUNG DISPLAY CO., LTD.**, Yongin-si, Gyeonggi-Do (KR)

(*) Notice: Subject to any disclaimer, the term of this patent is extended or adjusted under 35 U.S.C. 154(b) by 117 days.

(21) Appl. No.: **15/833,265**

(22) Filed: **Dec. 6, 2017**

(65) **Prior Publication Data**

US 2018/0286925 A1 Oct. 4, 2018

(30) **Foreign Application Priority Data**

Mar. 30, 2017 (KR) 10-2017-0041060

(51) **Int. Cl.**
H01L 27/32 (2006.01)
H01L 51/50 (2006.01)
(Continued)

(52) **U.S. Cl.**
CPC ***H01L 27/323*** (2013.01); ***G06F 3/044*** (2013.01); ***G06F 3/0412*** (2013.01);
(Continued)

(58) **Field of Classification Search**
CPC G06F 3/0412; G06F 3/044; G06F 2203/04111; G06F 2203/04112;
(Continued)

(56) **References Cited**

U.S. PATENT DOCUMENTS

7,274,424 B1 * 9/2007 Kurihara G02F 1/13338 345/173
9,129,927 B2 9/2015 Gupta et al.
(Continued)

FOREIGN PATENT DOCUMENTS

JP 2012-198879 9/2012
KR 1020140096905 8/2014
(Continued)

Primary Examiner — Bryan Earles
(74) *Attorney, Agent, or Firm* — F. Chau & Associates, LLC

(57) **ABSTRACT**

An organic light emitting display device includes: a substrate including pixel areas and a pixel separating area; a plurality of pixels; a plurality of spacers in the pixel separating area and spaced apart from each other; and a touch electrode unit disposed over the plurality of pixels and spacers. The touch electrode unit includes first touch electrodes arranged in a first direction and second touch electrodes arranged in a second direction. The touch electrode unit includes a plurality of touch pattern unit blocks repeatedly arranged. Each touch pattern unit block includes portions of each of neighboring first touch electrodes and portions of each of neighboring second touch electrodes. The spacers of each touch pattern unit block corresponds to a plurality of spacer pattern unit blocks repeatedly arranged. Each spacer pattern unit includes at least one spacer and is smaller than the touch pattern unit block.

17 Claims, 11 Drawing Sheets

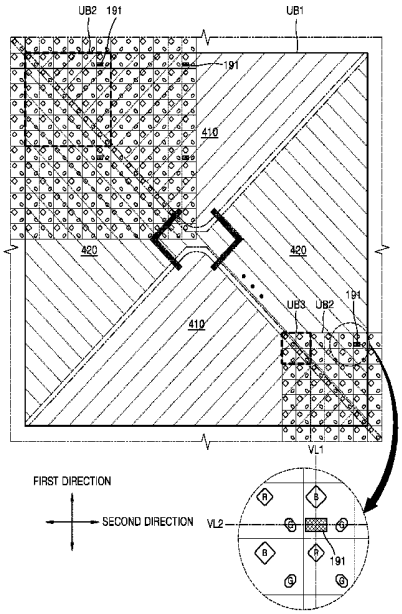

(51) **Int. Cl.**
H01L 51/52 (2006.01)
G06F 3/044 (2006.01)
G06F 3/041 (2006.01)

(52) **U.S. Cl.**
CPC ***H01L 27/3246*** (2013.01); ***H01L 51/5044*** (2013.01); ***H01L 51/5203*** (2013.01); ***H01L 51/525*** (2013.01); *G06F 2203/04111* (2013.01); *G06F 2203/04112* (2013.01)

(58) **Field of Classification Search**
CPC . H01L 51/525; H01L 27/323; H01L 27/3246; H01L 51/5044; H01L 51/5203; G09G 3/3208; G09G 2300/0439
See application file for complete search history.

(56) **References Cited**

U.S. PATENT DOCUMENTS

9,508,778	B2	11/2016	Kim et al.	
2009/0180043	A1*	7/2009	Rho	G02F 1/13338 349/12
2013/0154977	A1	6/2013	Lee et al.	
2017/0153752	A1*	6/2017	Kurasawa	G09G 3/3677
2017/0262121	A1*	9/2017	Kurasawa	G02F 1/13338
2018/0122867	A1*	5/2018	Choe	G06F 3/0412
2018/0151637	A1*	5/2018	Kajiyama	H01L 51/524

FOREIGN PATENT DOCUMENTS

KR	10-2015-0124360	11/2015
WO	2012121064	9/2012

* cited by examiner

FIG. 1

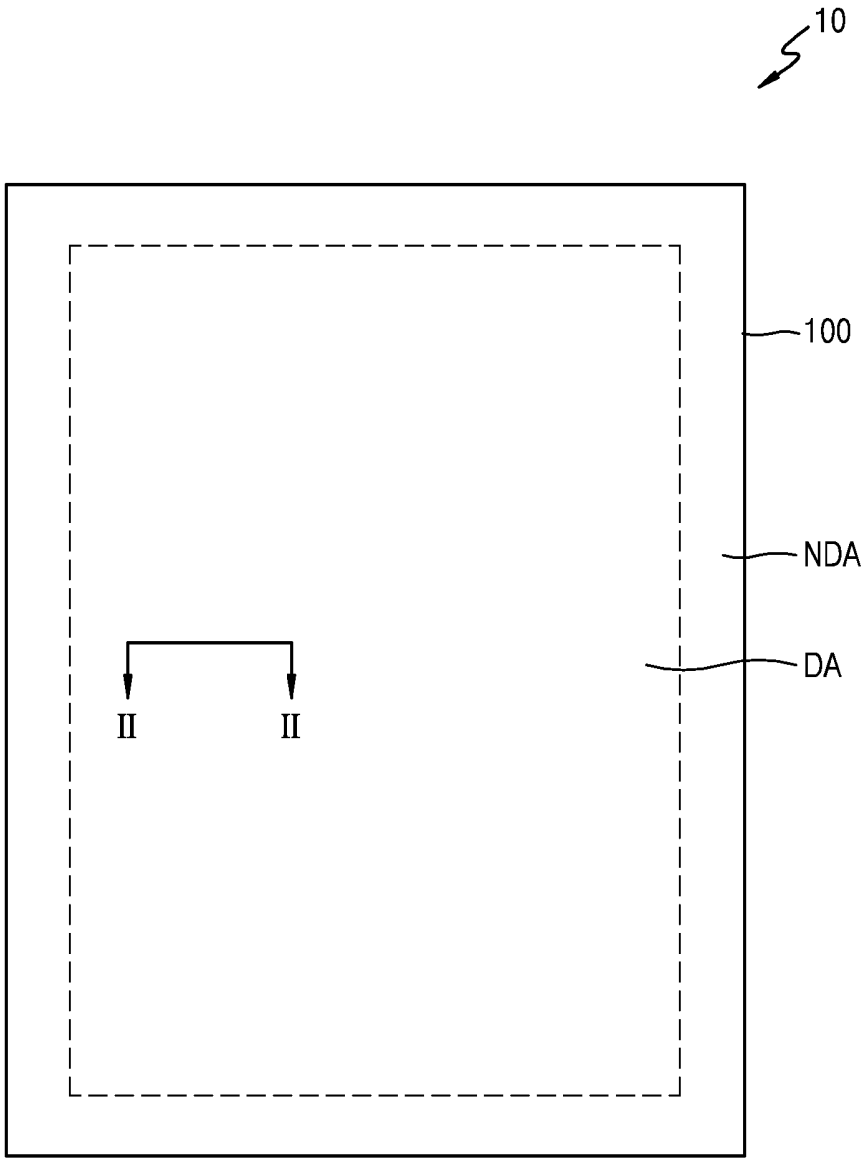

FIG. 2

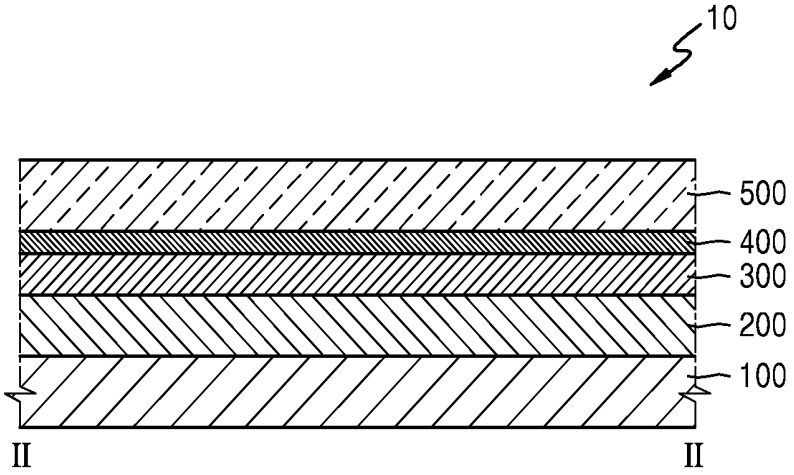

FIG. 3

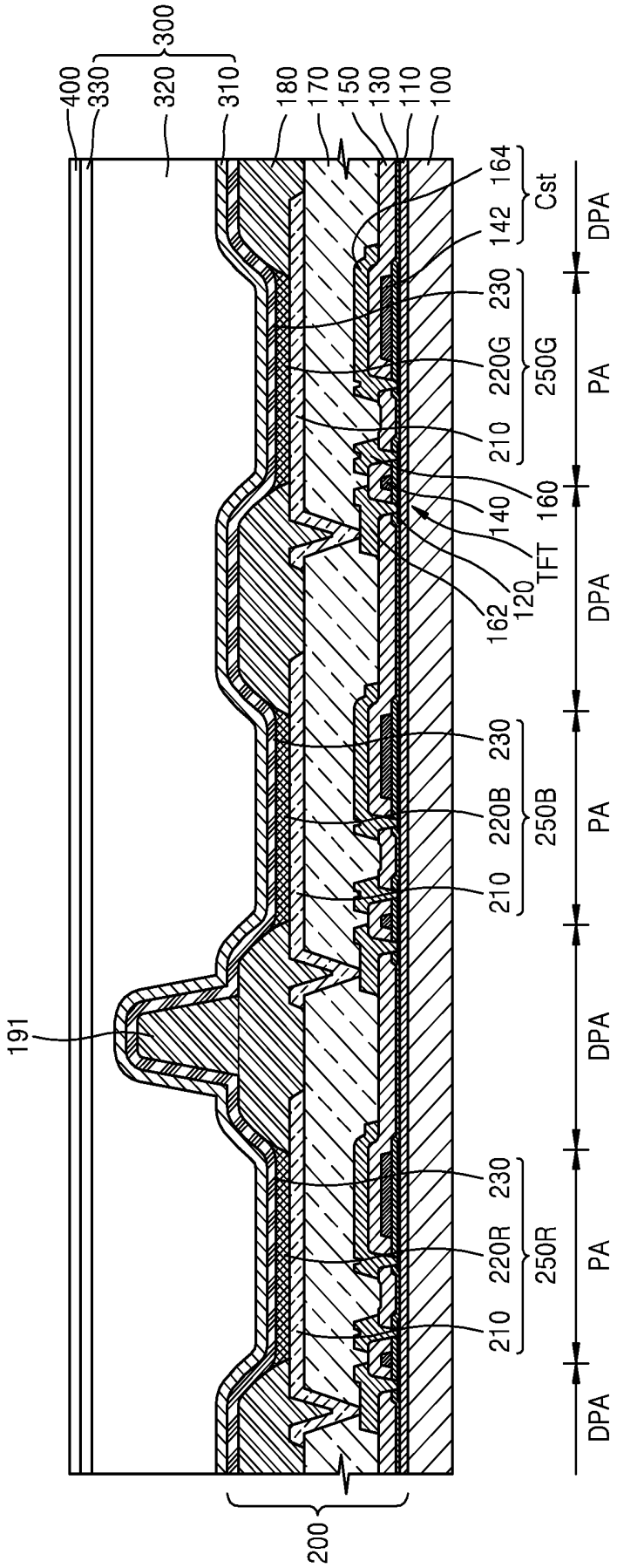
400
330
320
300
310
180
170
150
130
110
100
164
142
Cst
230
220G
250G
210
160
140
TFT
120
162
230
220B
250B
210
191
230
220R
250R
210
DPA
PA
DPA
PA
DPA
PA
DPA
200

FIG. 4

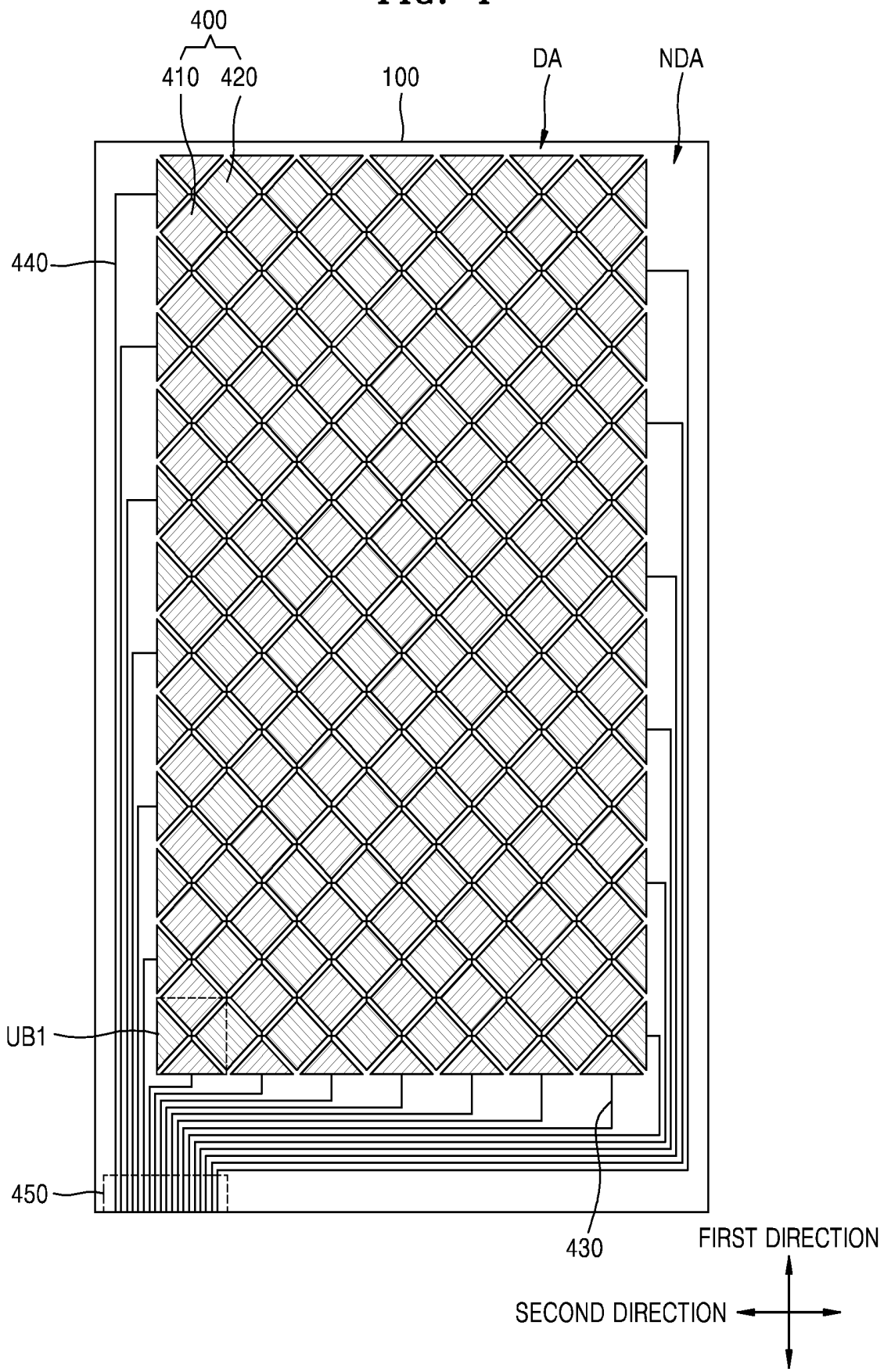
400
410
420
100
DA
NDA
440
UB1
450
430
FIRST DIRECTION
SECOND DIRECTION

FIG. 5

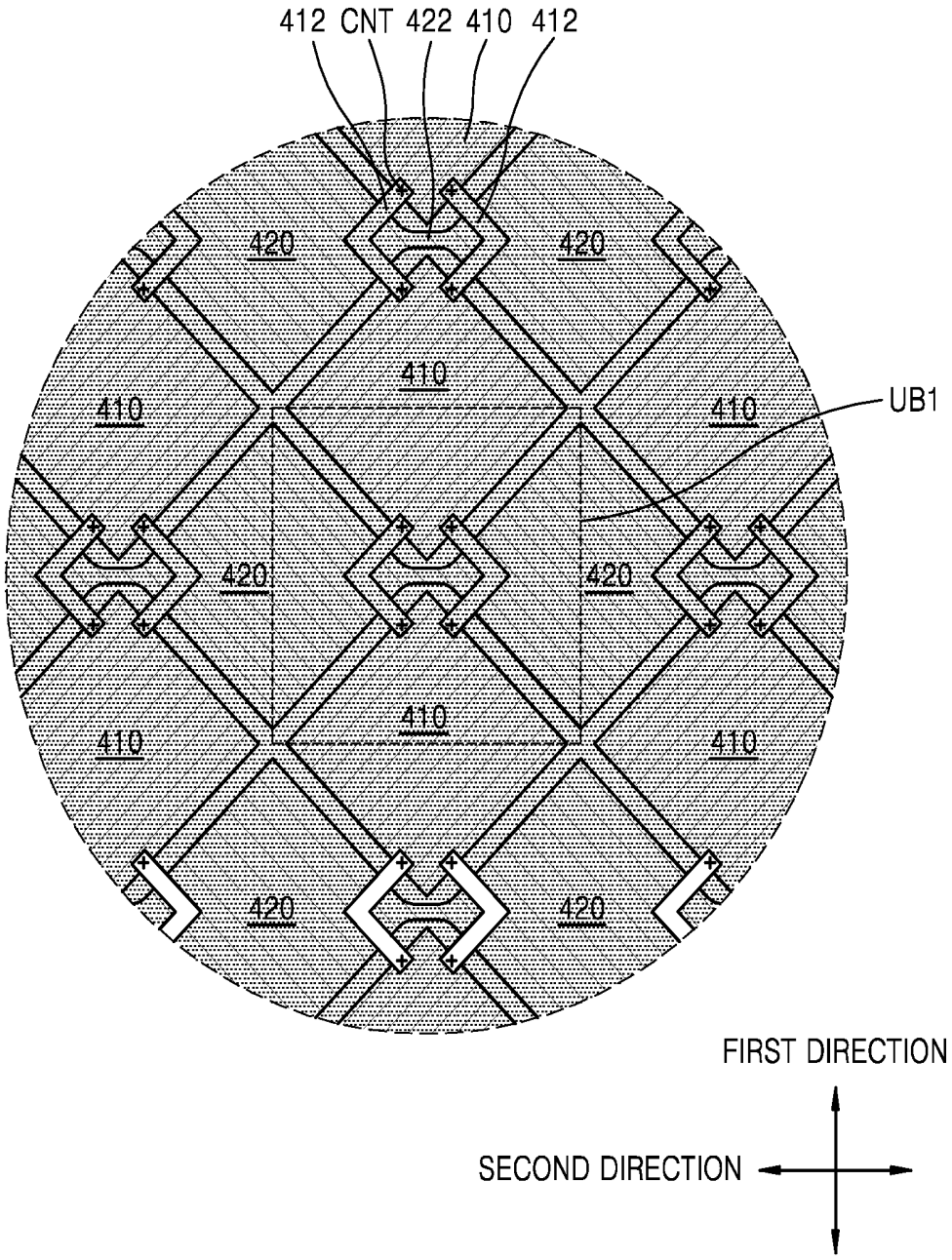
412
CNT
422
410
412
420
420
410
410
410
UB1
420
420
410
410
410
420
420
FIRST DIRECTION
SECOND DIRECTION

FIG. 6

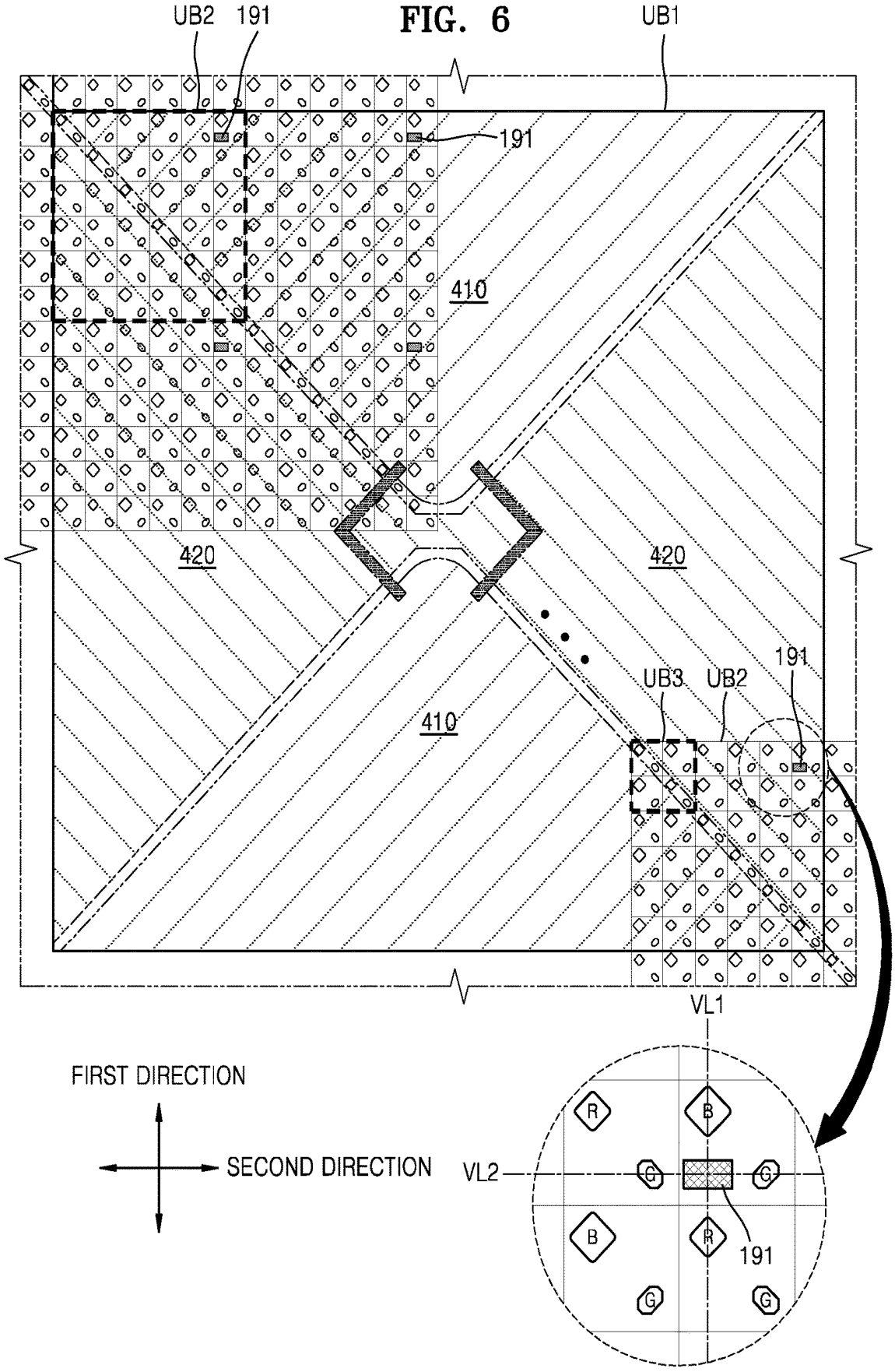
UB2
191
UB1
191
410
420
420
UB3
UB2
191
410
VL1
FIRST DIRECTION
SECOND DIRECTION
VL2
R
B
G
G
B
R
191
G
G

FIG. 7

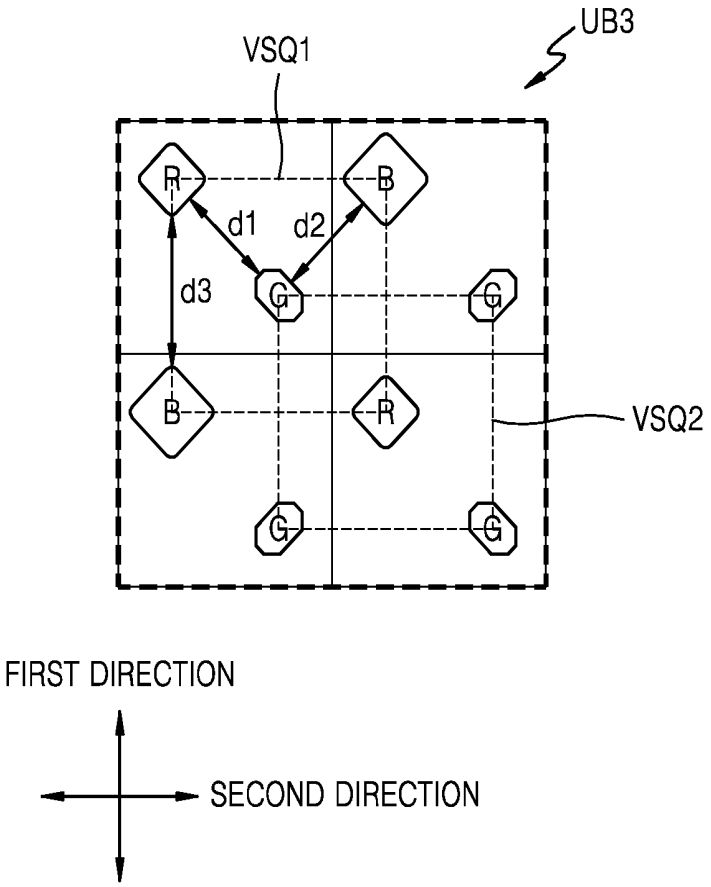
UB3
VSQ1
R
B
d1
d2
d3
G
G
B
R
VSQ2
G
G
FIRST DIRECTION
SECOND DIRECTION

FIG. 8

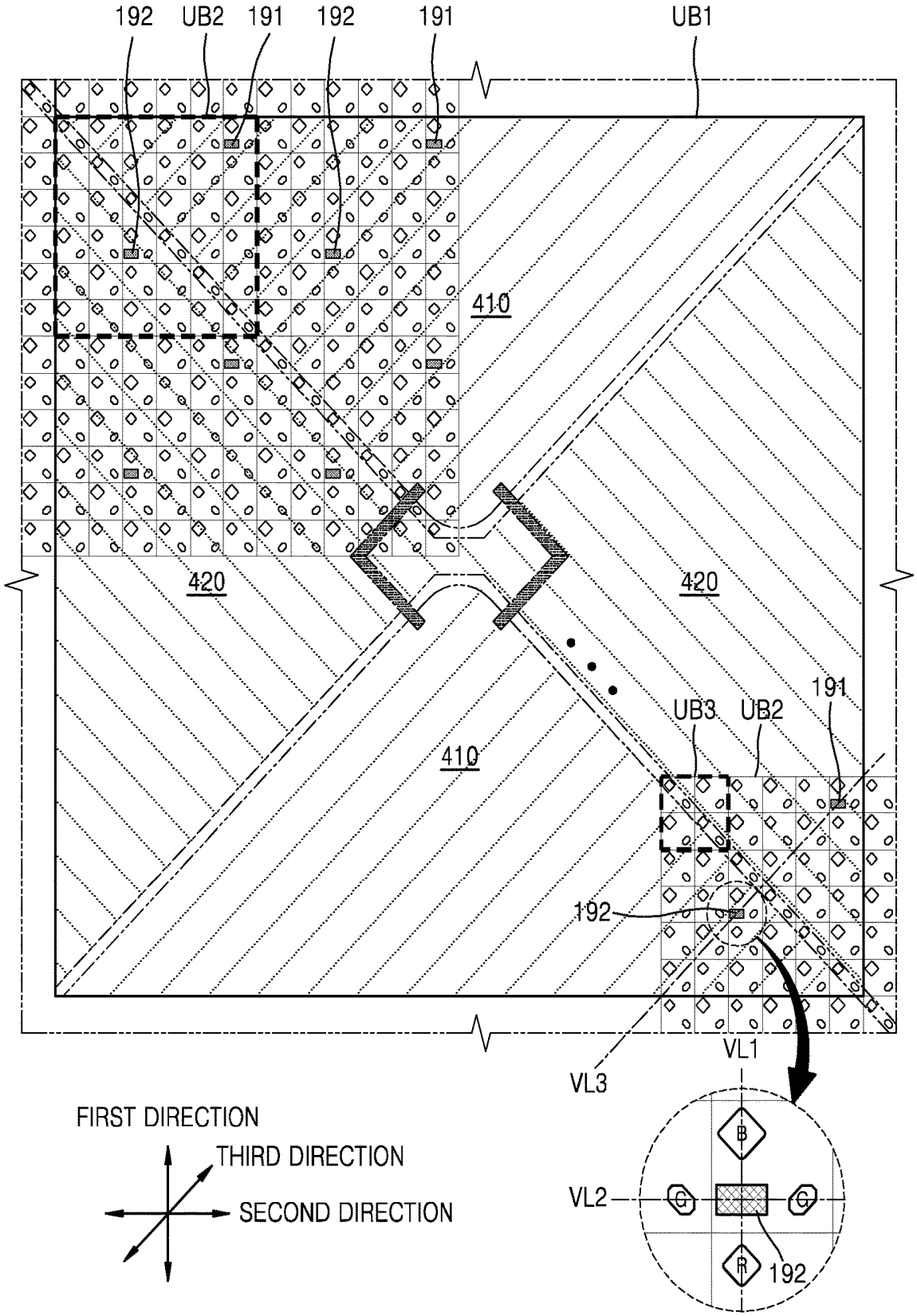
192
UB2
191
192
191
UB1
410
420
420
410
UB3
UB2
191
192
VL1
VL3
FIRST DIRECTION
THIRD DIRECTION
SECOND DIRECTION
VL2
B
G
G
R
192

FIG. 9

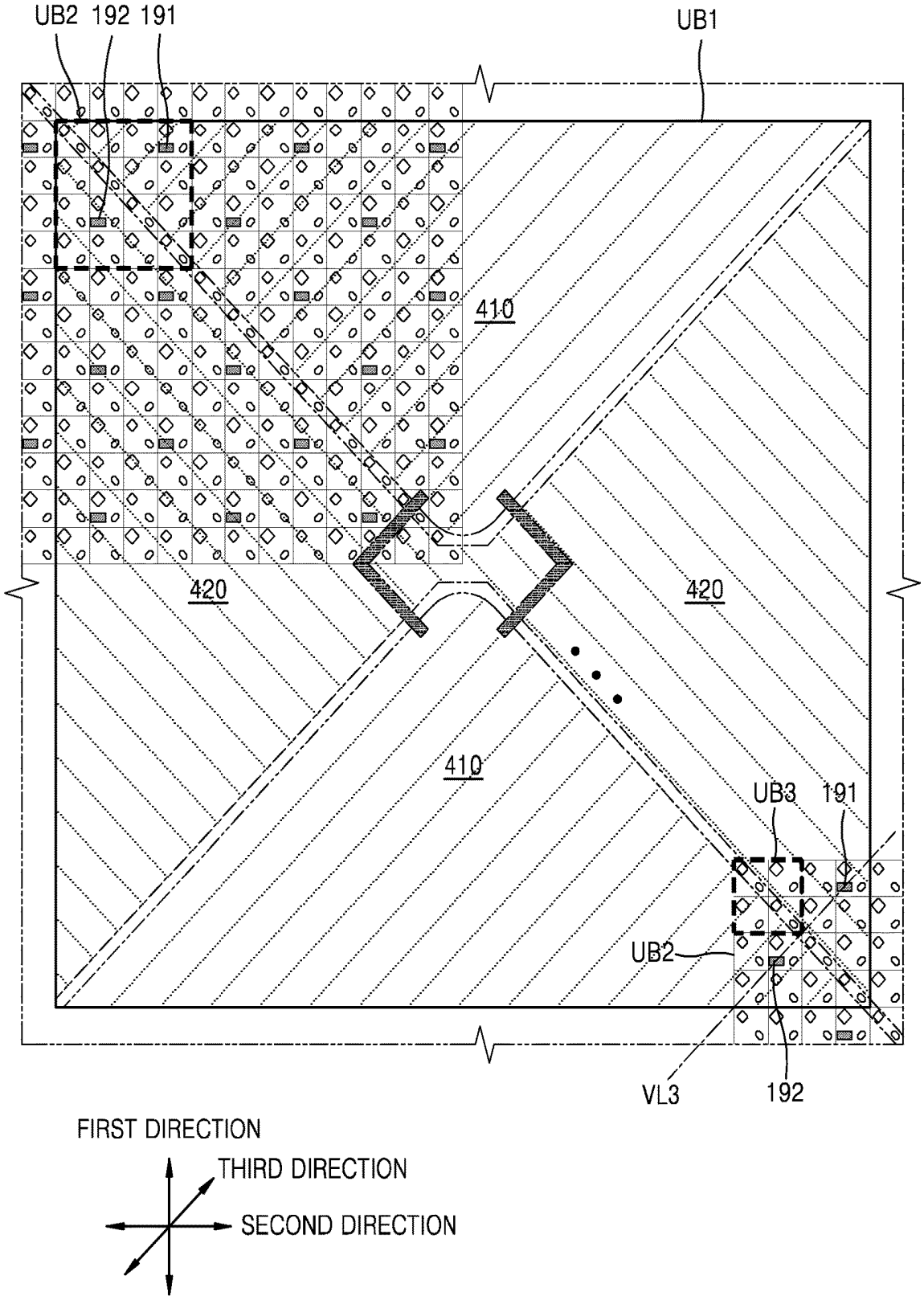
UB2
192
191
UB1
410
420
420
410
UB3
191
UB2
VL3
192
FIRST DIRECTION
THIRD DIRECTION
SECOND DIRECTION

FIG. 10

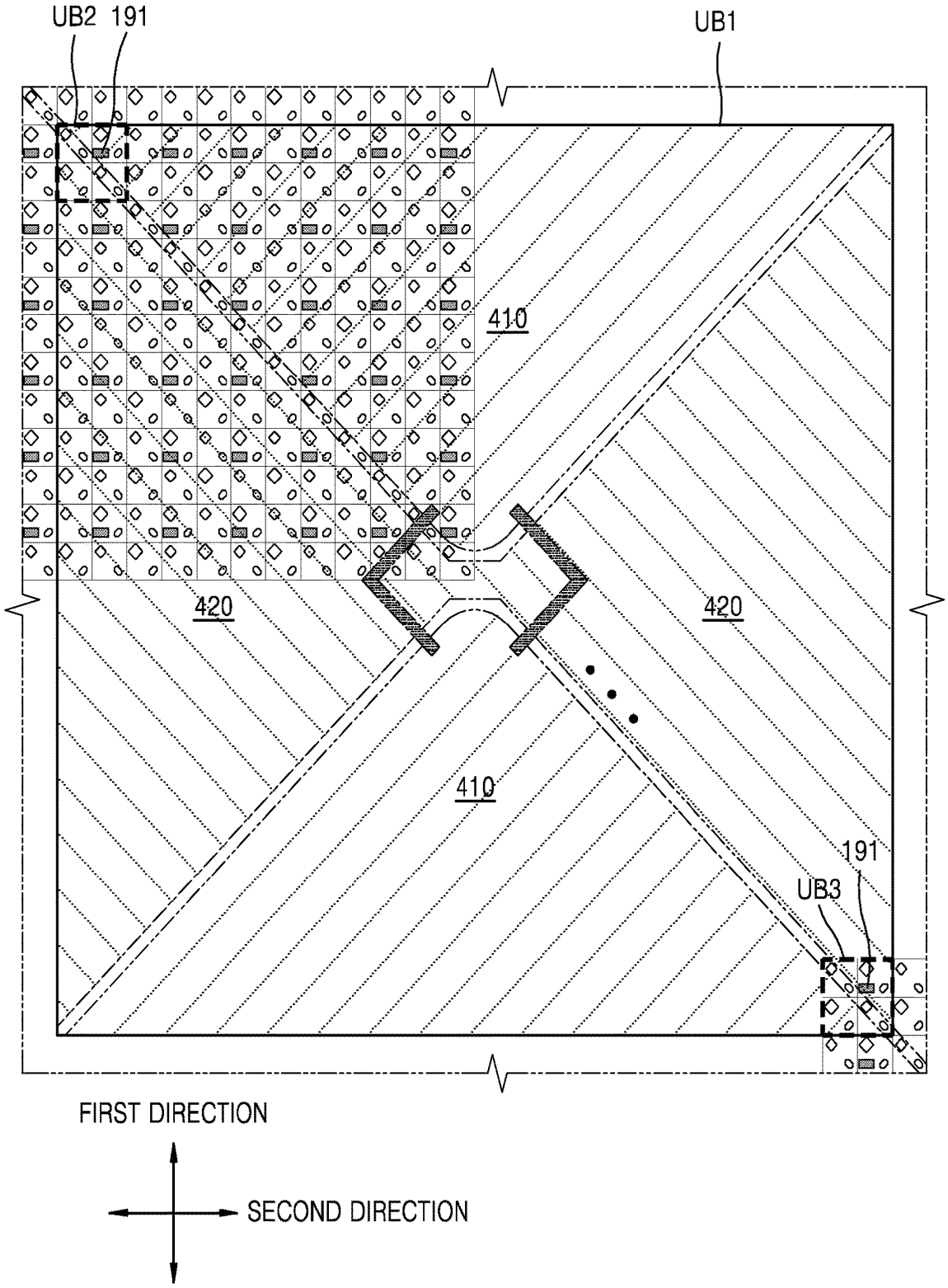
UB2
191
UB1
410
420
420
410
191
UB3
FIRST DIRECTION
SECOND DIRECTION

FIG. 11

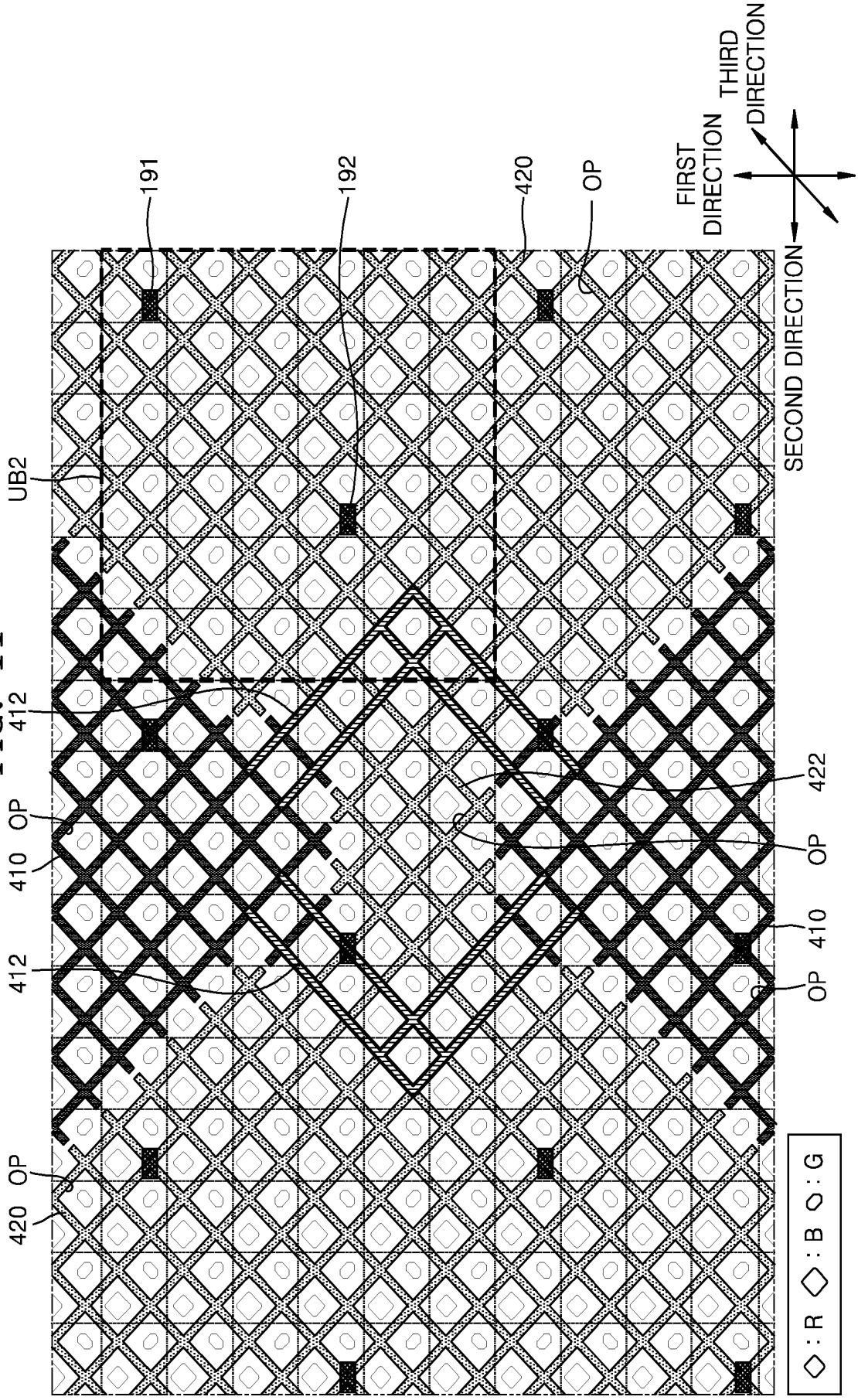
191
192
420
OP
FIRST DIRECTION
THIRD DIRECTION
SECOND DIRECTION
UB2
412
410
OP
412
420
OP
422
OP
410
OP
◇ : R ◇ : B ◇ : G

ORGANIC LIGHT EMITTING DISPLAY DEVICE

CROSS-REFERENCE TO RELATED APPLICATION

This application claims priority to and the benefit of Korean Patent Application No. 10-2017-0041060, filed on Mar. 30, 2017, in the Korean Intellectual Property Office, the disclosure of which is incorporated by reference in its entirety herein.

BACKGROUND

1. Technical Field

One or more exemplary embodiments of the inventive concept relate to an organic light emitting display device.

2. Discussion of the Related Art

An organic light emitting display device may include an organic light-emitting diode (OLED). An OLED is a light emitting diode in which the emissive electroluminescent layer is a film of an organic compound that emits light in response to an electric current. When the organic light emitting display device is implemented in a portable manner, the display device may include a touch function. For example, the display device may be configured to sense the location of a finger or a stylus of a user contacting a surface thereof.

The organic light emitting display device may include touch electrodes to support the touch function. An inspection may be performed to verify whether a defect is present in the touch electrodes. The inspection may include analyzing images of the touch electrodes captured by a camera.

SUMMARY

According to an exemplary embodiment of the inventive concept, there is provided an organic light emitting display device including: a substrate including a plurality of pixel areas and a pixel separating area between the pixel areas; a plurality of pixels corresponding to each of the plurality of pixel areas, each of the pixels including a pixel electrode, an opposite electrode, and an organic light emitting layer disposed between the pixel electrode and the opposite electrode; a plurality of spacers disposed in the pixel separating area and spaced apart from each other; and a touch electrode unit disposed over the plurality of pixels and the plurality of spacers. The touch electrode unit includes first touch electrodes arranged in a first direction and second touch electrodes arranged in a second direction substantially perpendicular to the first direction. The touch electrode unit includes a plurality of touch pattern unit blocks repeatedly arranged and each touch pattern unit block includes portions of each of neighboring first touch electrodes and portions of each of neighboring second touch electrodes. An arrangement of the spacers of each touch pattern unit block corresponds to a plurality of spacer pattern unit blocks repeatedly arranged and each spacer pattern unit includes at least one spacer and is smaller than the touch pattern unit block.

According to an embodiment, the plurality of pixels include a plurality of pixel pattern unit blocks repeatedly arranged, and each pixel pattern unit block includes at least a first pixel, a second pixel, and a third pixel, and the first pixel, the second pixel, and the third pixel emit light corresponding to different colors.

According to an embodiment, an arrangement of the pixels of each spacer pattern unit block corresponds to K of the pixel pattern unit blocks arranged in the first direction, and L of the pixel pattern unit blocks arranged in the second direction, where K and L are natural numbers.

According to an embodiment, an arrangement of the pixels of each touch pattern unit block corresponds to M of the pixel pattern unit blocks are arranged in the first direction, and N of the pixel pattern unit blocks arranged in the second direction, where M is a natural number and an integer multiple of the K, and N is a natural number and an integer multiple of the L.

According to an embodiment, in each pixel pattern unit block, the number of the third pixels is equal to a sum of the number of the first pixels and the number of the second pixels.

According to an embodiment, the at least one spacer is located at an intersection of a first virtual line connecting neighboring first pixels and second pixels, and a second virtual line connecting neighboring third pixels.

According to an embodiment, the at least one spacer includes a first spacer adjacent to a corner of each spacer pattern unit block.

According to an embodiment, each spacer pattern unit block further includes a second spacer separated apart from the first spacer in a third direction that forms an acute angle with respect to the first direction and the second direction.

According to an embodiment, each touch pattern unit block has a square shape.

According to an embodiment, each spacer pattern unit block has a square shape.

According to an exemplary embodiment of the inventive concept, provided is an organic light emitting display device including: a plurality of pixels, each pixel including a pixel electrode, an opposite electrode, and an organic light emitting layer between the pixel electrode and a opposite electrode; a plurality of spacers disposed between neighboring pixels and spaced apart from each other; and a touch electrode unit disposed over the plurality of pixels and the plurality of spacers. The touch electrode unit includes first touch electrodes arranged in a first direction and second touch electrodes arranged in a second direction perpendicular to the first direction. The touch electrode unit includes a plurality of touch pattern unit blocks repeatedly arranged and each touch pattern unit block includes portions of each of neighboring first touch electrodes and portions of each of neighboring second touch electrodes. The plurality of spacers includes a plurality of spacer pattern unit blocks repeatedly arranged and each spacer pattern unit block includes at least one spacer and is smaller than the touch pattern unit block.

According to an embodiment, each of the first touch electrodes and each of the second touch electrodes include wires of a net structure at least partially surrounding each of the plurality of pixels.

According to an embodiment, the plurality of spacers overlap the wires of the first touch electrodes or the wires of the second touch electrodes.

According to an embodiment, an arrangement of the spacers corresponding to each touch pattern unit block correspond to the arrangement of the spacers according to an A×B array of the spacer pattern unit blocks, where A and B are natural numbers.

According to an embodiment, the plurality of pixels include a plurality of pixel pattern unit blocks repeatedly

arranged, each pixel pattern unit block includes at least three pixels that emit light corresponding to different colors, and the arrangement of pixels of each spacer pattern unit block corresponds to K of the pixel pattern unit blocks arranged in the first direction or in the second direction, where K is a natural number.

According to an embodiment, the plurality of pixels include a plurality of pixel pattern unit blocks repeatedly arranged, each pixel pattern unit block includes at least three pixels that emit light corresponding to different colors, and the arrangement of the pixels of each touch pattern unit block corresponds to M of the pixel pattern unit blocks arranged in the first direction or in the second direction, where M is a natural number.

In this embodiment, the plurality of pixels include a first pixel, a second pixel, and a third pixel that emit light corresponding to different colors, and the at least one spacer is located at an intersection of a first virtual line connecting neighboring first pixels and second pixels, and a second virtual line connecting neighboring third pixels.

According to an embodiment, the at least one spacer includes a first spacer adjacent to one corner of each spacer pattern unit block.

According to an embodiment, each spacer pattern unit block further includes a second spacer spaced apart from the first spacer in a third direction crossing the first direction and the second direction.

According to an embodiment, each touch pattern unit block and each spacer pattern unit block have a square shape.

According to an exemplary embodiment of the inventive concept, an organic light emitting display device includes a substrate including a plurality of pixel areas and a pixel separating area between the pixel areas; a plurality of pixels corresponding to each of the plurality of pixel areas, each of the pixels including a pixel electrode, an opposite electrode, and an organic light emitting layer located between the pixel electrode and the opposite electrode; a plurality of spacers disposed in the pixel separating area and spaced apart from each other; and a touch electrode layer disposed over the plurality of pixels and the plurality of spacers. The touch electrode layer includes first touch electrodes and second touch electrodes arranged in a first direction, third touch electrodes and fourth touch electrodes arranged in a second other direction, a first connection line connecting the first and second touch electrodes together, and a second connection line connecting the third and fourth touch electrodes together, where the first direction is perpendicular to the second direction.

In an embodiment, a first spacer among the spacers is adjacently disposed between a first pixel, a second pixel, a third pixel, and a fourth pixel among the pixels, the first pixel emitting a first color, the second pixel emitting a second color, and the third and fourth pixels emitting a third color.

In an embodiment, wherein the first and second pixels are arranged on the first direction and the third and fourth pixels are arranged in the second direction.

BRIEF DESCRIPTION OF THE DRAWINGS

The inventive concept will become apparent and more readily appreciated from the following description of the embodiments thereof, taken in conjunction with the accompanying drawings in which:

FIG. **1** is a plan view of an organic light emitting display device according to an exemplary embodiment of the present inventive concept.

FIG. **2** is a sectional view taken along the line II-II in FIG. **1**.

FIG. **3** is a cross-sectional view of a display unit, a sealing member, and a touch electrode unit formed on the substrate of FIG. **2** according to an exemplary embodiment of the present inventive concept.

FIG. **4** is a plan view of the touch electrode unit disposed over the substrate.

FIG. **5** is an enlarged plan view of a portion of FIG. **4**.

FIG. **6** is a plan view of a portion of an organic light emitting display according to an exemplary embodiment of the present inventive concept.

FIG. **7** is a plan view of one pixel pattern unit block excerpted from FIG. **6**.

FIG. **8** is a plan view of a portion of an organic light emitting display device according to an exemplary embodiment of the present inventive concept.

FIG. **9** is a plan view of a portion of an organic light emitting display device according to an exemplary embodiment of the present inventive concept.

FIG. **10** is a plan view of a portion of an organic light emitting display device according to an exemplary embodiment of the present inventive concept.

FIG. **11** is a plan view of a portion of a touch pattern unit block according to an exemplary embodiment of the present inventive concept.

DETAILED DESCRIPTION

As the inventive concept allows for various changes and numerous embodiments, exemplary embodiments will be illustrated in the drawings and described in detail in the written description. Effects and features of the present disclosure and methods of achieving them will be apparent with reference to the embodiments described below in detail with reference to the drawings. However, the present disclosure is not limited to the embodiments described below, but may be implemented in various forms.

Hereinafter, exemplary embodiments of the present inventive concept will be described in detail with reference to the accompanying drawings, wherein like reference numerals refer to like or corresponding components throughout the drawings and a duplicate description thereof will be omitted.

As used herein, the singular forms "a," "an" and "the" are intended to include the plural forms as well, unless the context clearly indicates otherwise.

When a certain embodiment may be implemented differently, a specific process order may be performed differently from the described order. For example, two consecutively described processes may be performed substantially at the same time or performed in an order opposite to the described order.

FIG. **1** is a plan view of an organic light emitting display device **10** according to an exemplary embodiment of the present inventive concept. FIG. **2** is a sectional view taken along the line II-II in FIG. **1**.

Referring to FIG. **1**, the organic light emitting display device **10** includes a display area DA and a non-display area NDA. In the display area DA, pixels including display elements such as organic light emitting diodes (OLEDs) may be arranged to provide a certain image. The non-display area NDA is an area which does not provide an image and surrounds the display area DA. In the non-display area

NDA, a scan driver and a data driver which provide electrical signals to be applied to the pixels in the display area DA, and power lines providing power such as a driving voltage and a common voltage may be arranged. The scan driver may apply gate signals to gate lines connected to the pixels and the data driver may provide data signals to data lines connected to the pixels.

As illustrated in FIG. **2**, the organic light emitting display device **10** includes a display unit **200** forming the display area DA on a substrate **100**. The substrate **100** may include various materials such as glass, metal, or plastic such as polyethylene terephthalate (PET), polyethylenenaphthalate (PEN), and polyimide. The display unit **200** may include pixels including OLEDs that are configured to provide a certain image. In an embodiment, the display unit **200** is covered by a sealing member **300**.

The sealing member **300** may face the substrate **100** with the display unit **200** therebetween and protect the display unit **200** from external moisture or oxygen, or the like. In an embodiment, a touch electrode unit **400** is located on the sealing member **300**.

The touch electrode unit **400** may include a plurality of touch electrodes having conductivity. For example, the touch electrode unit **400** may be of a capacitive type. In an embodiment, the touch electrode unit **400** outputs coordinates of a location at which an object approaches or touches, by using a change in capacitance occurring when the object such as a user's finger or a stylus approaches or touches a surface of the touch electrode unit **400**.

In an embodiment of the inventive concept, an optical functional layer **500** is located on the touch electrode unit **400**. In an embodiment of the inventive concept, the optical function layer **500** includes a polarizing plate or a polarizer. In an embodiment, the polarizer is an optical filter that lets light waves of a specific polarization pass and blocks lights waves of other polarizations. In another exemplary embodiment, the optical function layer **500** includes a layer including a black matrix and a color filter. In an embodiment, the black matrix prevents light from passing therethrough. According to another exemplary embodiment, the optical functional layer **500** includes a window member. In an embodiment, the window member is transparent.

FIG. **3** is a cross-sectional view of the display unit **200**, the sealing member **300**, and the touch electrode unit **400** formed on the substrate **100** of FIG. **2** according to an exemplary embodiment of the present inventive concept.

Referring to FIG. **3**, the display unit **200** is located on the substrate **100**. The display unit **200** includes OLEDs **250**R, **250**B, and **250**G provided for each pixel. The OLEDs **250**R, **250**B, and **250**G may be electrically connected to their respective thin film transistors (TFTs) and storage capacitor (Cst).

In an embodiment, the TFT includes a semiconductor layer **120**, a gate electrode **140** overlapping a portion (channel area) of the semiconductor layer **120**, and a source electrode **160** and a drain electrode **162** connected to the semiconductor layer **120**. The semiconductor layer **120** may include an inorganic semiconductor such as silicon, or an organic semiconductor or an oxide semiconductor material. The semiconductor layer **120** may include a source area, a drain area, and a channel area located between the source area and the drain area. According to an embodiment, an amorphous silicon layer is formed on the substrate **100**, and is crystalized to be a polycrystalline silicon layer, and patterned. In an embodiment, a portion of the polycrystalline silicon layer which does not overlap the gate electrode **140** is doped with impurities by using a self-aligning mask on the gate electrode **140**. As a result, the semiconductor layer **120** including the source area, the drain area, and the channel area therebetween may be formed. The gate electrode **140** may have a single layer or a multi-layer including at least one of Al, Pt, Pd, Ag, Mg, Au, Ni, Nd, Ir, Cr, Li, Ca, Mo, Ti, and/or W.

A buffer layer **110** for preventing infiltration of impurities may be located between the semiconductor layer **120** and the substrate **100**. A gate insulating layer **130** may be located between the semiconductor layer **120** and the gate electrode **140**. An interlayer insulating layer **150** may be located on the gate electrode **140**. The buffer layer **110** may include an inorganic material such as silicon oxide (SiO_x), silicon nitride (SiN_x), silicon oxynitride (SiON), aluminum oxide (Al_2O_3), aluminum nitride (AlN), titanium oxide (TiO_2), or titanium nitride (TiN). The gate insulating layer **130** may include a material such as SiNx or SiO_x, and the interlayer insulating layer **150** may be a single layer or a multi-layer including a material such as SiN_x, SiO_x, or SiON.

The source electrode **160** and the drain electrode **162** may be located on the interlayer insulating layer **150** and be connected to the source area and the drain area of the semiconductor layer **120**, respectively. According to an embodiment, the source area and the drain area of the semiconductor layer **120** may be referred to as a source electrode and a drain electrode, respectively. The source electrode **160** and the drain electrode **162** may have a single layer or a multi-layer including at least one of Al, Pt, Pd, Ag, Mg, Au, Ni, Nd, Ir, Cr, Li, Ca, Mo, Ti, and/or W.

The storage capacitor Cst includes a bottom electrode **142** and a top electrode **164**. The bottom electrode **142** (e.g., a lower electrode) may include the same material as the gate electrode **140**, and the upper electrode **164** may include the same material as the source electrode **160** or the drain electrode **162**. However, the inventive concept is not limited thereto.

The thin film transistor TFT and the storage capacitor Cst may be covered by a planarization insulating layer **170**. The planarization insulating layer **170** may include SiO_2, SiN_x, SiON, Al_2O_3, TiO_2, Ta_2O_5, HfO_2, ZrO_2, BST, or PZT. Alternatively, the planarization insulating layer **170** may include an organic insulating material such as a general purpose polymer (PMMA or PS), a polymer derivative having a phenolic group, an acrylic polymer, an imide polymer, an arylether polymer, an amide polymer, a fluorine polymer, a p-xylene polymer, a vinyl alcohol-based polymer, and blends thereof. Alternatively, the planarization insulating layer **170** may include both the above-mentioned inorganic insulating material and organic insulating material.

The organic light emitting devices **250**R, **250**B, and **250**G corresponding to respective pixels may be located on the planarization insulating layer **170**. Each of the organic light emitting devices **250**R, **250**B, and **250**G may be electrically connected to the thin film transistor TFT via contact holes defined in the planarization insulating layer **170**. The organic light emitting devices **250**R, **250**B, and **250**G emit red color light, blue color light, and green color light, respectively.

The red color organic light emitting device **250**R includes a pixel electrode **210**, an organic light emitting layer **220**R emitting red color light, and an opposite electrode **230**, and may correspond to a first pixel emitting red color light. The blue color organic light emitting device **250**B includes the pixel electrode **210**, an organic light emitting layer **220**B emitting blue color light, and the opposite electrode **230**, and may correspond to a second pixel emitting blue color light. The green color organic light emitting device **250**G include

the pixel electrode **210**, an organic light emitting layer **220**G emitting green color light, and the opposite electrode **230**, and may correspond to a third pixel emitting green color light. In this specification, it will be understood that the first, second, and third pixels represent red color, blue color, and green color sub-pixels, respectively.

The pixel electrode **210** may correspond to each pixel area PA and may be a reflective electrode. The pixel electrode **210** may include a reflective film including Ag, Mg, Al, Pt, Pd, Au, Ni, Nd, Ir, Cr, or a compound thereof, and may further include a layer located on the reflective film, including indium tin oxide (ITO), indium zinc oxide (IZO), zinc oxide (ZnO), or indium oxide (In_2O_3). For example, the pixel electrode **210** may be a triple layer of ITO/Ag/ITO.

In an embodiment, the pixel defining layer **180** includes an opening exposing a central portion of the pixel electrode **210** to define the pixel (sub-pixel). In addition, an arc or the like may be prevented from occurring at an edge (end) of the pixel electrode **210** by increasing a distance between the edge of the pixel electrode **210** and the opposite electrode **230**. The pixel defining layer **180** may include an organic insulating material such as polyimide (PI) or hexamethyldisiloxane (HMDSO).

In an embodiment, a spacer **191** is located on the pixel defining layer **180**. For example, the spacer **191** may directly contact the pixel defining layer **180**. The spacer **191** may correspond to a pixel separating area DPA located between the pixel areas PA. The spacer **191** may prevent or minimize defects of the organic light emitting layers **220**R, **220**B and **220**G due to sagging of a mask, by supporting the mask to be used in a deposition process of the organic light emitting layers **220**R, **220**B and **220**G to be described below. Alternatively, the spacer **191** may prevent or minimize the Newton-ring phenomenon due to sagging or the like of a sealing substrate, by maintaining a gap between the substrate **100** and the sealing substrate constant, even when external pressure is applied to the sealing member **300** (for example, a rigid sealing substrate).

The spacer **191** may include the same material as the pixel defininig layer **180**. For example, the spacer **191** may include an organic insulating material such as PI or HMDSO. The spacer **191** and the pixel defining layer **180** may be formed together in a same mask process, for example, in a process using a halftone mask.

The red color organic light emitting layer **220**R may include a fluorescent material or a phosphorescent material that emits red color visible light, the blue color organic light emitting layer **220**B may include a fluorescent material or a phosphorescent material that emits blue color visible light, and the green color organic light emitting layer **220**G may include a fluorescent material or a phosphorescent material that emits green color visible light.

In an embodiment, the opposite electrode **230** is a (semi-) transparent electrode. The opposite electrode **230** may be a layer including Ag, Mg, Al, Yb, Ca, Li, Au or a compound thereof, or a layer including a (semi-) transparent material such as ITO, IZO, ZnO or In_2O_3. According to an embodiment, the opposite electrode **230** includes a metal thin film including Ag or Mg. The opposite electrode **230** may be integrally formed to entirely cover both the pixel area PA and the pixel separating area DPA.

FIG. **3** illustrates a structure in which the red color, blue color, and green color organic light emitting layers **220**R, **220**B, and **220**G are between the pixel electrode **210** and the opposite electrode **230** in direct contact with them. However, the inventive concept is not limited thereto. According to an exemplary embodiment, the red color, blue color, and green color organic light emitting layers **220**R, **220**B, and **220**G include a first functional layer thereunder and a second functional layer thereon. Each of the first and/or second functional layers, like the opposite electrode **230**, may be integrally formed to entirely cover both the pixel area PA and the pixel separating area DPA.

The first functional layer may be a single layer or a multi-layer including a hole injection layer (HIL) and/or a hole transport layer (HTL). For example, when the first functional layer includes a polymer material, the first functional layer may be a single HTL including poly-(3,4)-ethylene-dihydroxythiophene (PEDOT) or polyaniline (PANI). When the first functional layer includes a low molecular weight material, the first functional layer may include the HIL and the HTL.

The second functional layer may include a single layer or a multi-layer including an electron transport layer (ETL) and/or an electron injection layer (EIL). The second functional layer may be omitted. For example, when the first functional layer and the organic light emitting layers **220**R, **220**B, and **220**G include polymer materials, the second functional layer may be omitted. When the first functional layer and the organic light emitting layers **220**R, **220**G, and **220**B include low molecular weight materials, the second functional layer may be additionally formed for improving the characteristics of an organic light emitting device. In this case, the second functional layer may include the ETL and/or the EIL.

The sealing member **300** may include at least one inorganic layer and at least one organic layer. In an embodiment, the sealing member **300** includes a first inorganic layer **310**, a second inorganic layer **330**, and an organic layer **320** located between the first inorganic layer **310** and the second inorganic layer **330**. The first and second inorganic layers **310** and **330** may include SiO_x, SiN_x, or SiON. The organic layer **320** may include at least one of polyethylene terephthalate, polyethylene naphthalate, polycarbonate, polyimide, polyethylene sulfonate, polyoxymethylene, polyarylate, and/or hexamethyldisiloxane. Although not illustrated, other layers such as a capping layer may be located between the first inorganic layer **310** and the opposite electrode **230** as needed. A case is described in which the sealing member **300** includes the first inorganic layer **310**, the organic layer **320**, and the second inorganic layer **330** which are sequentially stacked, according to an embodiment. However, the number of stacking times may be changed such that inorganic layers and organic layers are alternately stacked. According to an embodiment, a case is described in which the sealing member **300** is a thin film sealing film including alternately stacked inorganic layers and organic layers. However, according to another embodiment, the sealing member **300** may be a rigid translucent sealing substrate.

In an embodiment, the touch electrode unit **400** is located on the sealing member **300** and generates location information in accordance with a touch input. A structure of the touch electrode unit **400** will be described below with reference to FIGS. **4** and **5**.

FIG. **4** is a plan view of the touch electrode unit **400** over the substrate **100**. FIG. **5** is an enlarged plan view of an excerpt of a portion of FIG. **4**.

Referring to FIG. **4**, the touch electrode unit **400** (e.g., a touch electrode layer) includes first touch electrodes **410** arranged in a first direction and second touch electrodes **420** arranged in a second direction crossing (e.g. perpendicular to) the first direction.

The first touch electrodes **410** and the second touch electrodes **420** may be alternately arranged with each other. For example, the first touch electrodes **410** may be arranged in parallel with each other, with corners thereof meeting each other, in the first direction, and the second touch electrodes **420** may be arranged in parallel with each other between the first touch electrodes **410**, with corners thereof meeting each other, in the second direction.

In an embodiment, the first touch electrodes **410** arranged in the first direction are electrically connected to each other, and the second touch electrodes **420** arranged in the second direction are electrically connected to each other. For example, as illustrated in FIG. **5**, the first touch electrodes **410** may be electrically connected to each other via a first connection line **412**, and the second touch electrodes **420** may be electrically connected to each other via a second connection line **422**.

The first and second touch electrodes **410** and **420** may be located on the same layer and include the same materials. The second connection line **422** connecting the neighboring second touch electrodes **420** may be located on the same layer as the second touch electrodes **420** and include the same material as the second touch electrodes **420**. In an embodiment, the second touch electrodes **420** and the second connection line **422** are integrally formed, and the first touch electrodes **410** are electrically connected to each other via the first connection line **412** thereon with an insulating layer (not illustrated) therebetween. In an embodiment, an insulating layer is located between a first connection line **412** and an overlapping second connection line **422** to prevent them from contacting one another. The first connection line **412** may be connected to respective first touch electrodes **410** via contact holes CNT penetrating the insulating layer. The first and second touch electrodes **410** and **420**, and the first and second connection lines **412** and **422** may include a transparent conductive layer such as ITO, IZO, or ZnO, or may include a (semi-)transparent metal layer.

In an embodiment, columns of the first touch electrodes **410** in the first direction and rows of the second touch electrodes **420** in the second direction are respectively connected to sensing lines **430** and **440**, as illustrated in FIG. **4**. Signals obtained via the sensing lines **430** and **440** may be provided via a pad **450** to a circuit unit (not illustrated) including a location detection circuit. The location detection circuit may analyze voltages on the sensing lines **430** and **440** to detect the location at which a user touched the touch electrode unit **400**. In an embodiment, the touch electrodes **410** and **420** are capacitive sensors.

The touch electrode unit **400** may be formed in a repetitive arrangement of certain touch pattern unit blocks UB**1**, as illustrated in FIGS. **4** and **5**. The touch pattern unit block UB**1** may be a virtual unit block having a certain area including at least portions of neighboring first touch electrodes **410** and at least portions of neighboring second touch electrodes **420**, and may be understood as a minimum repetitive unit of array patterns of the first and second touch electrodes **410** and **420**. Alternatively, the touch pattern unit block UB**1** may be understood as a minimum unit of image capturing for defect inspection of the touch electrode unit **400**. The defect of the touch electrode unit **400** may be detected by capturing the image corresponding to the touch pattern unit block UB**1** for each area and comparing images. In this case, the minimum unit of image capture for defect inspection may correspond to the touch pattern unit block UB**1**.

In an embodiment, a shape of the touch pattern unit block UB**1** is a quadrangle, for example, a square. For example, the touch pattern unit block UB**1** may be a square having a length of less than about 5 mm in the first and second directions. When the touch electrode unit **400** is formed in the repetitive arrangement of square touch pattern unit blocks UB**1** having a certain area while including a portion of the first touch electrodes **410** and a portion of the second touch electrodes **420**, the location detection may be executed at a relatively fast response speed and the accuracy of the location detection may be improved.

FIG. **6** is a plan view of a portion of the organic light emitting display device **10** according to an exemplary embodiment of the present inventive concept and illustrates an arrangement of the first and second touch electrodes **410** and **420**, the spacers **191**, and first, second, and third pixels R, G, and B. FIG. **7** is a plan view of one pixel pattern unit block excerpted from FIG. **6**.

As shown in FIG. **6**, the spacers **191** and the first, second, and third pixels R, B, and G included in the organic light emitting display device **10** may be arranged by a certain rule.

An arrangement of the spacers **191** included in the organic light emitting display device **10** will be described below.

The spacers **191** of the organic light emitting display device include a plurality of spacer pattern unit blocks UB**2** repeatedly arranged. The spacers **191** may be formed in a repetitive arrangement of spacer pattern unit blocks UB**2**. The spacer pattern unit block UB**2** may be a virtual unit block having a certain area including at least one spacer **191** and may be understood as a minimum repetitive unit of the arrangement pattern of the spacers **191** included in the organic light emitting display device **10**.

At least one spacer **191** of the spacer pattern unit block UB**2** may be arranged at a particular location in the spacer pattern unit block UB**2**. FIG. **6** illustrates an embodiment where the spacer pattern unit block UB**2** includes one spacer **191** and the one spacer **191** is adjacent to one corner of the spacer pattern unit block UB**2**.

The spacer **191** may be located between adjacent pixels, as illustrated in the enlarged view of FIG. **6**. For example, the spacer **191** may be located at a crossing point of a first virtual line VL**1** connecting neighboring first and second pixels R and B, and a second virtual line VL**2** connecting neighboring third pixels G. For example, the spacer **191** may be adjacently located between first and second pixels R and B and a pair of third pixels G.

In an embodiment, the spacer pattern unit block UB**2** is a virtual unit block having a smaller size than the touch pattern unit block UB**1**, and each touch pattern unit block UB**1** corresponds to the repetitive arrangement of the spacer pattern unit blocks UB**2**. For example, the arrangement of the spacers **191** of each touch pattern unit block UB**1** may be the same as the arrangement of the spacers **191** of the spacer pattern unit blocks UB**2** repeatedly arranged, as illustrated in FIG. **6**.

For example, when each touch pattern unit block UB**1** corresponds to the arrangement of the spacer pattern unit blocks UB**2** in an A×B array (A and B are natural numbers), the arrangement pattern of the spacers **191** corresponding to each touch pattern unit block UB**1** may correspond to the arrangement pattern of the spacers **191** when the spacer pattern unit blocks UB**2** are arranged in the A×B array. In the present specification, "the spacer pattern unit blocks UB**2** are arranged in the A×B array" may denote "a matrix array in which a number A of the spacer pattern unit blocks UB**2** are arranged in the first direction and a number B of the spacer pattern unit blocks UB**2** are arranged in the second

direction". When the touch pattern unit block UB1 is a square and the spacer pattern unit block UB2 is a square, the above-described A and B have the same values.

When the arrangement of the spacers **191** corresponding to each touch pattern unit block UB1 does not correspond to the repetitive arrangement of the spacer pattern unit blocks UB2, the arrangements of the spacers **191** of each touch pattern unit block UB1 will be different from each other. For example, an arrangement pattern of the spacers **191** in any one of the neighboring touch pattern unit blocks UB1s may be different from the arrangement pattern of the spacers **191** in the other one of the neighboring touch pattern unit blocks UB1s. A defect inspection of the touch electrode unit **400** (refer to FIG. **2**) may be performed by capturing an image for each touch pattern unit block UB1 and comparing the captured images with one another or with a reference image. When the arrangement patterns of the spacers **191** are different in each touch pattern unit block UB1, interference fringes due to the spacers **191** may be different from each other and the images may be distorted. Thus, it may be impossible to detect the defect of the touch electrode unit **400**. However, according to an embodiment of the present inventive concept, since the arrangement of the spacers **191** of each touch pattern unit block UB1 corresponds to the repetitive arrangement of the spacer pattern unit blocks UB2 including the spacer **191** at particular location, the arrangement of the spacers **191** may be the same for each touch pattern unit block UB1, and problems due to the interference described above at the defect inspection of the touch electrode unit **400** may be prevented or reduced.

An arrangement of the first, second, and third pixels R, B, and G included in the organic light emitting display device **10** will be described below.

The pixels of the organic light emitting display device **10**, for example, the first, second, and third pixels R, B, and G, may be formed in a repetitive arrangement of certain pixel pattern unit blocks UB3s. The pixel pattern unit block UB3 may be a virtual unit block having a certain area including the first pixel R, the second pixel B, and the third pixel G. It may be understood that the pixel pattern unit block UB3 corresponds to the minimum repetitive unit of the arrangement pattern of pixels included in the organic light emitting display device **10**. In an embodiment, the pixel pattern unit block UB3 has a square shape.

In an embodiment, the pixel pattern unit block UB3 includes the first, second, and third pixels R, B, and G, and the sum of the numbers of the first and second pixels R and B is the same as the number of the third pixels G. FIGS. **6** and **7** illustrate the pixel pattern unit block UB3 including two first pixels R, two second pixels B, and four third pixels G.

The first, second, and third pixels R, B, and G may be at particular locations in the pixel pattern unit block UB3. As illustrated in FIG. **7**, the first pixel R and the second pixel B may be respectively placed at vertices of a first virtual rectangle VSQ1 having one of the third pixels G as a center point. For example, the first pixels R may be respectively located at opposite vertices of a first virtual rectangle VSQ1 with the third pixel G therebetween in a diagonal direction. The second pixels B may be respectively located at opposite vertices of the first virtual rectangle VSQ1 with the third pixel G therebetween in the diagonal direction. The third pixels G may be respectively located at opposite vertices of the second virtual rectangle VSQ2 centering on a pixel (the first pixel or the second pixel) at any one vertex of the first virtual rectangle VSQ1.

In an embodiment, the size of the first virtual rectangle VSQ1 is the same as that of the second virtual rectangle VSQ2. Accordingly, the distances (the shortest distances) between the neighboring first and second pixels R and B in the first and second directions may be equal to each other, and the distances (the shortest distances) between the neighboring third pixels G in the first and second directions may be equal to each other. In an embodiment, a shortest distance dl between the first pixel R and the third pixel G, and a shortest distance d2 between the second pixel B and the third pixel G are equal to each other, but smaller than a shortest distance d3 between the first pixel R and the second pixel B.

In an embodiment, the pixel pattern unit block UB3 is a virtual unit block having a smaller size than the touch pattern unit block UB1, and each touch pattern unit block UB1 may correspond to the repetitive arrangement of the pixel pattern unit block UB3. For example, the arrangement of the pixels corresponding to each touch pattern unit block UB1 may correspond to the repetitive arrangement of the pixel pattern unit blocks UB3s as illustrated in FIG. **6**.

In an embodiment, the size (area) of each touch pattern unit block UB1 corresponds to the size (area) of a set of pixel pattern unit blocks UB3s arranged in an M×N array (M and N are natural numbers), and the arrangement pattern of the pixels of each touch pattern unit block UB1 correspond to the arrangement pattern of the pixels when the pixel pattern unit blocks UB3s are arranged in the M×N array (M and N may be the same numbers or different numbers).

In an embodiment, the pixel pattern unit block UB3 is a virtual unit block having a smaller size than the spacer pattern unit block UB2. Each spacer pattern unit block UB2 may correspond to the repetitive arrangement of the pixel pattern unit blocks UB3s. For example, the arrangement of the pixels of each spacer pattern unit block UB2 may correspond to the repetitive arrangement of the pixel pattern unit blocks UB3s.

In an embodiment, the size (area) of each spacer pattern unit block UB2 corresponds to the size (area) of a set of pixel pattern unit blocks UB3s arranged in a K×L array (K and L are natural numbers). In this case, the arrangement pattern of the pixels of each spacer pattern unit block UB2 may correspond to the arrangement pattern of the pixels when the pixel pattern unit blocks UB3s are arranged in the K×L array (K and L are natural numbers, and K and L may be the same numbers or different numbers). In FIG. **6**, each spacer pattern unit block UB2 is illustrated as corresponding to a 3×3 array of the pixel pattern unit block UB3, as an example.

From an aspect of the arrangement of the spacers **191**, the touch pattern unit block UB1 may correspond to the repetitive arrangement of the spacer pattern unit blocks UB2 as described above. In an embodiment, when the touch pattern unit block UB1 and the spacer pattern unit block UB2 are respectively squares, the arrangement of the spacers **191** in each touch pattern unit block UB1 may correspond to arrangement of the spacers **191** in the spacer pattern unit blocks UB2 when the spacer pattern unit blocks UB2 are arranged in, for example, an array of 15×15, or 20×20, or the like.

Similarly, from an aspect of pixel arrangement, the touch pattern unit block UB1 and the spacer pattern unit block UB2 may correspond to the repetitive arrangement of the pixel pattern unit blocks UB3s. In an embodiment, when each spacer pattern unit block UB2 corresponds to a 3×3 array of the pixel pattern unit blocks UB3s and each touch pattern unit block UB1 corresponds to a 15×15 array of the spacer pattern unit blocks UB2, the arrangement of the pixels of each touch pattern unit block UB1 may correspond

to the arrangement of the pixels when the pixel pattern unit blocks UB3s are arranged in a 45×45 array.

FIG. **8** is a plan view of a portion of the organic light emitting display device according to another exemplary embodiment of the present inventive concept, and illustrates arrangements of the first and second touch electrodes **410** and **420**, the first and second spacers **191** and **192**, and the first, second, and third pixels R, B, and G. Since a configuration of the touch pattern unit block UB1 of FIG. **8** is similar to that described above with reference to FIGS. **6** and **7**, differences will be mainly described below.

Referring to FIG. **8**, the spacer pattern unit block UB2 may include a plurality of spacers, for example, a first spacer **191** and a second spacer **192**.

The first spacer **191** may be placed adjacent to one corner of the spacer pattern unit block UB2 as described above with reference to FIG. **6**. In an embodiment, the second spacer **192** is spaced apart from the first spacers **191** by a certain distance. For example, the first spacer **191** and the second spacer **192** may be spaced apart from each other along a third virtual line VL3 extending in a third direction. The second spacer **192** may be placed adjacent to other corner of the spacer pattern unit block UB2 in the third direction. The third direction may be in an acute angle with respect to the first direction and the second direction, and may correspond to a diagonal direction of the spacer pattern unit block UB2.

Referring to an enlarged view in FIG. **8**, the second spacer **192**, like the first spacer **191**, is placed at a point where the first virtual line VL1 connecting the neighboring first and second pixels R and B, and the second virtual line VL2 connecting the neighboring third pixels G cross each other.

FIG. **9** is a plan view of a portion of the organic light emitting display device according to another exemplary embodiment of the present inventive concept, and illustrates arrangements of the first and second touch electrodes **410** and **420**, the first and second spacers **191** and **192**, and the first, second, and third pixels R, B, and G. Since a configuration of the touch pattern unit block UB1 of FIG. **9** is similar to that described above with reference to FIGS. **6** and **7**, differences will be mainly described below.

The pixel arrangement of the spacer pattern unit block UB2 may include the repetitive arrangement of the pixel pattern unit blocks UB3s. For example, the pixel arrangement of the spacer pattern unit block UB2 may correspond to that of a 2×2 array of the pixel pattern unit blocks UB3s as illustrated in FIG. **9**. The first and second spacers **191** and **192** may be arranged in each spacer pattern unit block UB2, and the first and second spacers **191** and **192** may be arranged along the third virtual line VL3 in the third direction as described above with reference to FIG. **8**.

FIG. **10** is a plan view of a portion of the organic light emitting display device according to an exemplary embodiment of the present inventive concept, and illustrates arrangements of the first and second touch electrodes, spacers, and pixels. Since a configuration of the touch pattern unit block UB1 of FIG. **10** is similar to that described above with reference to FIGS. **6** and **7**, differences will be mainly described below.

Referring to FIG. **10**, the spacer pattern unit block UB2 is smaller than the touch electrode unit block UB1, but is the same size as the pixel pattern unit block UB3. For example, the spacer pattern unit block UB2 and the pixel pattern unit block UB3 may be substantially the same unit blocks.

FIG. **11** is a plan view of a portion of the touch pattern unit block UB1 according to an exemplary embodiment of the present inventive concept. FIG. **11** may be understood as an enlarged view of a portion where the first touch electrode **410** and the second touch electrode **420** intersect each other in FIG. **8**.

Referring to FIG. **11**, the first and second spacers **191** and **192** are located between the first, second, and third pixels R, B, and G. The spacer arrangement of the organic light emitting display device may correspond to the repetitive arrangement of the spacer pattern unit blocks UB2 including the first and second spacers **191** and **192** which are spaced apart from each other in the third direction. The pixel arrangement of the organic light emitting display device may correspond to the repetitive arrangement of the pixel pattern unit blocks UB3s described above with reference to FIG. **7**.

The first touch electrodes **410** are spaced apart from each other in the first direction and are electrically connected to each other via the first connection line **412**. The second touch electrodes **420** are arranged in the second direction and are electrically connected to each other via the second connection line **212** between the neighboring second touch electrodes **420**. The first connection line **412** may be placed on the first touch electrodes **410** with an insulating layer therebetween, and may electrically connect the first touch electrodes **410** via contact holes passing through the insulation layer. The second connection line **422** may be placed on a same layer as the second touch electrodes **420** and electrically connect the second touch electrodes **420** as described above.

In an embodiment, each of the first and second touch electrodes **410** and **420** include wires formed to at least partially surround the first through third pixels R, B, and G. The wires may have a net structure in which they are connected to each other but do not overlap the first through third pixels R, B, and G. The wires of each of the first and second touch electrodes **410** and **420** may at least partially surround each pixel.

In an embodiment, the wires of a first touch electrode **410** includes first wires that are parallel to one another that are connected to one another via second wires that are parallel to one another and perpendicular to the first wires. In an embodiment, the wires of a second touch electrode **420** include third wires that are parallel to one another that are connected to one another via fourth wires that are parallel to one another and perpendicular to the third wires. In an embodiment, the first wires are perpendicular to the third wires. In an embodiment, a first connection line **412** has an L shape (or a V shape) that connects the wires of a pair of first touch electrodes **410** together. In an embodiment, the L shape (or V shape) overlaps a portion of a second touch electrode **420**. In an embodiment, the pair of first touch electrodes **410** are connected together via a pair of the L shaped (or V shaped) connection lines, and the pair of second touch electrodes **420** are connected together via the second connection line **422**. In an embodiment, the first L shape (or V shape) of the pair of L shapes overlaps a portion of a second touch electrode **420** of the pair of second touch electrodes **420** and the second L shape (or V shape) of the pair of L shapes (or V shapes) overlaps a portion of another adjacent second touch electrode **420** of the pair of electrodes **420**.

Although the first and second touch electrodes **410** and **420** include transparent electrodes such as ITO, the transmittance may be less than about 100%. Thus, when the first, second, and third pixels R, B, and G overlap the wires of the first and second touch electrodes **410** and **420**, intensity of light of the red color, blue color, and green color, respectively emitted from the first, second, and third pixels R, B,

and G may be reduced while the light passes through the wires. However, according to an embodiment of the present inventive concept, each of the first and second touch electrodes **410** and **420** have openings OP corresponding to the first, second, and third pixels R, B and G, and are formed in a net structure which at least partially surrounds the first, second, and third pixels R, B, and G. Thus, a problem of reduction in luminous efficiency due to the first and second touch electrodes **410** and **420** may be prevented.

The first and second connection lines **412** and **422** may have the same structure as the first and second touch electrodes **410** and **420**. For example, each of the first and second connection lines **412** and **422** may have a net structure which at least partially surrounds each of the first, second, and third pixels R, B, and G, and may include openings OP exposing the first, second, and third pixels R, B, and G.

As described above, the first and second touch electrodes **410** and **420**, and the first and second connection lines **412** and **422** may have a wire structure which at least partially surrounds the first, second, and third pixels R, B and G. Thus, the wires, and the first and second spacers **191** and **192** may overlap each other in a non-pixel area.

As described above, the first and second touch electrodes **410** and **420** may include transparent electrodes such as ITO. However, the inventive concept is not limited thereto. In another embodiment of the inventive concept, the first and second touch electrodes **410** and **420**, and the first and second connection lines **412** and **422** include metal such as Ti, and/or Al.

Even when the organic light emitting display device as a display device having flexibility is bent or curled around a certain axis as the center, since the first and second touch electrodes **410** and **420** have the net structure as described above, broken or damaged wires may be prevented or reduced.

While one or more embodiments of the inventive concept have been described with reference to the figures, it will be understood by those of ordinary skill in the art that various changes in form and details may be made therein without departing from the spirit and scope of the inventive concept.

What is claimed is:

1. An organic light emitting display device comprising:

a substrate including a plurality of pixel areas and a pixel separating area between the pixel areas;

a plurality of pixels corresponding to each of the plurality of pixel. areas, each of the pixels including a pixel electrode, an opposite electrode, and an organic light emitting layer disposed between the pixel electrode and the opposite electrode;

a plurality of spacers disposed in the pixel separating area and spaced apart from each other; and

a touch electrode unit disposed over the plurality of pixels and the plurality of spacers, the touch electrode unit including first touch electrodes arranged in a first direction and second touch electrodes arranged in a second direction perpendicular to the first direction, wherein:

the touch electrode unit includes a plurality of touch pattern unit blocks repeatedly arranged and each touch pattern unit block includes portions of each of neighboring first touch electrodes and portions of each of neighboring second touch electrodes; and

an arrangement of the spacers of each touch pattern unit block corresponds to a plurality of spacer pattern unit blocks repeatedly arranged and each spacer pattern unit block includes at least one spacer and is smaller than the touch pattern unit block,

wherein the plurality of pixels includes a plurality of pixel pattern unit blocks repeatedly arranged, each pixel pattern unit block includes at least a first pixel, a second pixel, and a third pixel that emit light corresponding to different colors, and

wherein an arrangement of the pixels of each spacer pattern unit block corresponds to K of the pixel pattern unit blocks arranged in the first direction, and L of the pixel pattern unit blocks arranged in the second direction, where K and L are natural numbers,

wherein an arrangement of the pixels of each touch pattern unit block corresponds to M of the K of the pixel pattern unit blocks arranged in the first direction, and N of the pixel pattern unit blocks arranged in the second direction, where M is a natural number and an integer multiple of the K, and N is a natural number and an integer multiple of the L.

2. The organic light emitting display device of claim **1**, wherein, in each pixel pattern unit block, the number of the third pixels is equal to a sum of the number of the first pixels and the number of the second pixels.

3. The organic light emitting display device of claim **1**, wherein the at least one spacer is located at an intersection of a first virtual line connecting neighboring first pixels and second pixels, and a second virtual line connecting neighboring third pixels.

4. The organic light emitting display device of claim **1**, wherein the at least one spacer comprises a first spacer adjacent to a corner of each spacer pattern unit block.

5. The organic light emitting display device of claim **4**, wherein each spacer pattern unit block further comprises a second spacer separated apart from the first spacer in a third direction that forms an acute angle with respect to the first direction and the second direction.

6. The organic light emitting display device of claim **1**, wherein each touch pattern unit block has a square shape.

7. The organic light emitting display device of claim **1**, wherein each spacer pattern unit block has a square shape.

8. An organic light emitting display device comprising:

a plurality of pixels, each pixel including a pixel electrode, an opposite electrode, and an organic light emitting layer located between the pixel electrode and the opposite electrode;

a plurality of spacers disposed between. neighboring pixels and spaced apart from each other; and

a touch electrode unit disposed over the plurality of pixels and the plurality of spacers, the touch electrode unit including first touch electrodes arranged in a first direction and second touch electrodes arranged in a second direction substantially perpendicular to the first direction, wherein:

the touch electrode unit includes a plurality of touch pattern unit blocks repeatedly arranged and each touch pattern unit block includes portions of each of neighboring first touch electrodes and portions of each of neighboring second touch electrodes; and

the plurality of spacers includes a plurality of spacer pattern unit blocks repeatedly arranged and each spacer pattern unit block includes at least one spacer and is smaller than the touch pattern unit block,

wherein the plurality of spacer pattern unit blocks includes:

a first touch pattern unit block including a first spacer that is located in an intersection of meshed lines of one of the first touch electrodes, and

a second pattern unit block including a second spacer that is located in an intersecion of meshed lines of one of the second touch electrodes.

9. The organic light emitting display device of claim **8**, wherein each of the first touch electrodes and each of the second touch electrodes include wires of a net structure at least partially surrounding each of the plurality of pixels.

10. The organic light emitting display device of claim **9**, wherein the plurality of spacers overlap the wires of the first touch electrodes or the wires of the second touch electrodes.

11. The organic light emitting display device of claim **8**, wherein an arrangement of the spacers corresponding to each touch pattern unit block corresponds to the arrangement of the spacers according to an A×B array of the spacer pattern unit blocks, where A and B are natural numbers.

12. The organic light emitting display device of claim **8**, wherein the plurality of pixels includes a plurality of pixel pattern unit blocks repeatedly arranged, each pixel pattern unit block includes at least three pixels that emit light corresponding to different colors, and the arrangement of pixels of each spacer pattern unit block corresponds to K of the pixel pattern unit blocks arranged in the first direction or in the second direction, where K is a natural number.

13. The organic light emitting display device of claim **8**, wherein the plurality of pixels includes a plurality of pixel pattern unit blocks repeatedly arranged, each pixel pattern unit block includes at least three pixels that emit light corresponding to different colors, and the arrangement of the pixels of each touch pattern unit block corresponds to M of the pixel pattern unit blocks arranged in the first direction or in the second direction, where M is a natural number.

14. The organic light emitting display device of claim **8**, wherein the plurality of pixels includes a first pixel, a second pixel, and a third pixel that emit light corresponding to different colors, and the at least one spacer is located at an intersection of a first virtual line connecting neighboring first pixels and second pixels, and a second virtual line connecting neighboring third pixels.

15. The organic light emitting display device of claim **14**, wherein the at least one spacer comprises a first spacer adjacent to one corner of each spacer pattern unit block.

16. The organic light emitting display device of claim **15**, wherein each spacer pattern unit block further comprises a second spacer spaced apart from the first spacer in a third direction crossing the first direction and the second direction.

17. The organic light emitting display device of claim **8**, wherein each touch pattern unit block and each spacer pattern unit block have a square shape.

* * * * *

专利名称(译)	有机发光显示装置		
公开(公告)号	US10692942	公开(公告)日	2020-06-23
申请号	US15/833265	申请日	2017-12-06
[标]申请(专利权)人(译)	三星显示有限公司		
申请(专利权)人(译)	三星DISPLAY CO.，LTD.		
当前申请(专利权)人(译)	三星DISPLAY CO.，LTD.		
[标]发明人	KIM KWANGMIN KWAK WONKYU KIM KIWOOK KIM DONGSOO MOON JOONGSOO PARK HYUNAE LEE JIEUN JIN CHANGKYU		
发明人	KIM, KWANGMIN KWAK, WONKYU KIM, KIWOOK KIM, DONGSOO MOON, JOONGSOO PARK, HYUNAE LEE, JIEUN JIN, CHANGKYU		
IPC分类号	H01L27/32 H01L51/52 G06F3/044 G06F3/041 H01L51/50		
CPC分类号	H01L27/323 G06F3/044 G06F3/0412 H01L51/5203 H01L51/5044 H01L51/525 H01L27/3246 G06F2203/04111 G06F2203/04112 H01L27/322 H01L27/3244 H01L27/326		
优先权	1020170041060 2017-03-30 KR		
其他公开文献	US20180286925A1		
外部链接	Espacenet		

摘要(译)
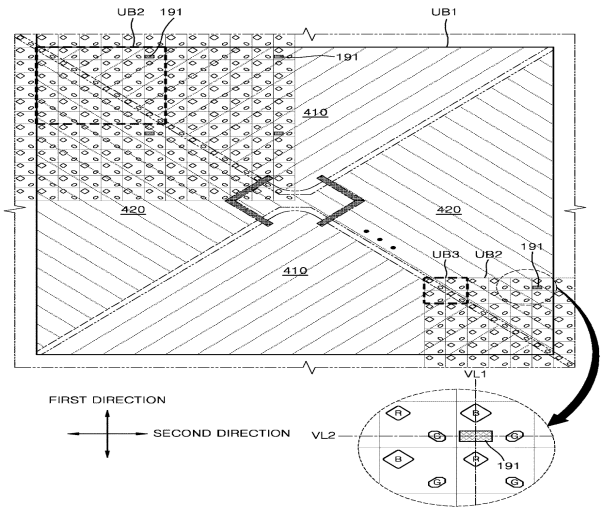
一种有机发光显示装置，包括：基板，其包括像素区域和像素分隔区域；以及设置在基板上的像素区域。 多个像素； 在像素分离区域中彼此间隔开的多个间隔物； 触摸电极单元设置在多个像素和间隔物上方。 触摸电极单元包括沿第一方向布置的第一触摸电极和沿第二方向布置的第二触摸电极。 触摸电极单元包括重复布置的多个触摸图案单元块。 每个触摸图案单元块包括每个相邻的第一触摸电极的一部分和每个相邻的第二触摸电极的一部分。 每个触摸图案单元块的间隔物对应于重复布置的多个间隔物图案单元块。 每个间隔物图案单元包括至少一个间隔物，并且小于触摸图案单元块。